V. BRØNDUM A/S	Splittegning Exploded View Explosionszeichnung	**Ghibli SB 143 L10**

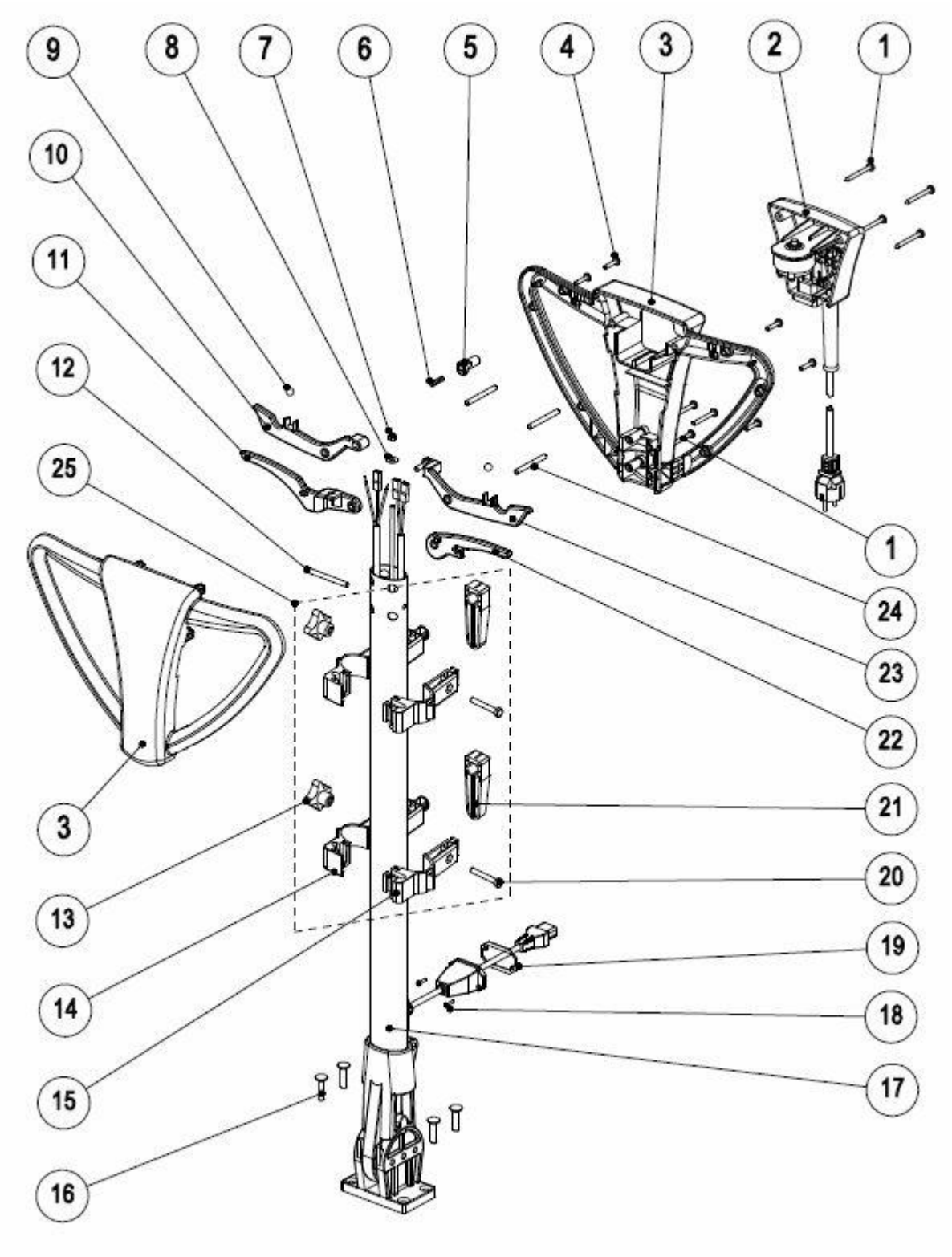

V. BRØNDUM A/S	Splittegning Exploded View Explosionszeichnung	**Ghibli SB 143 L10**

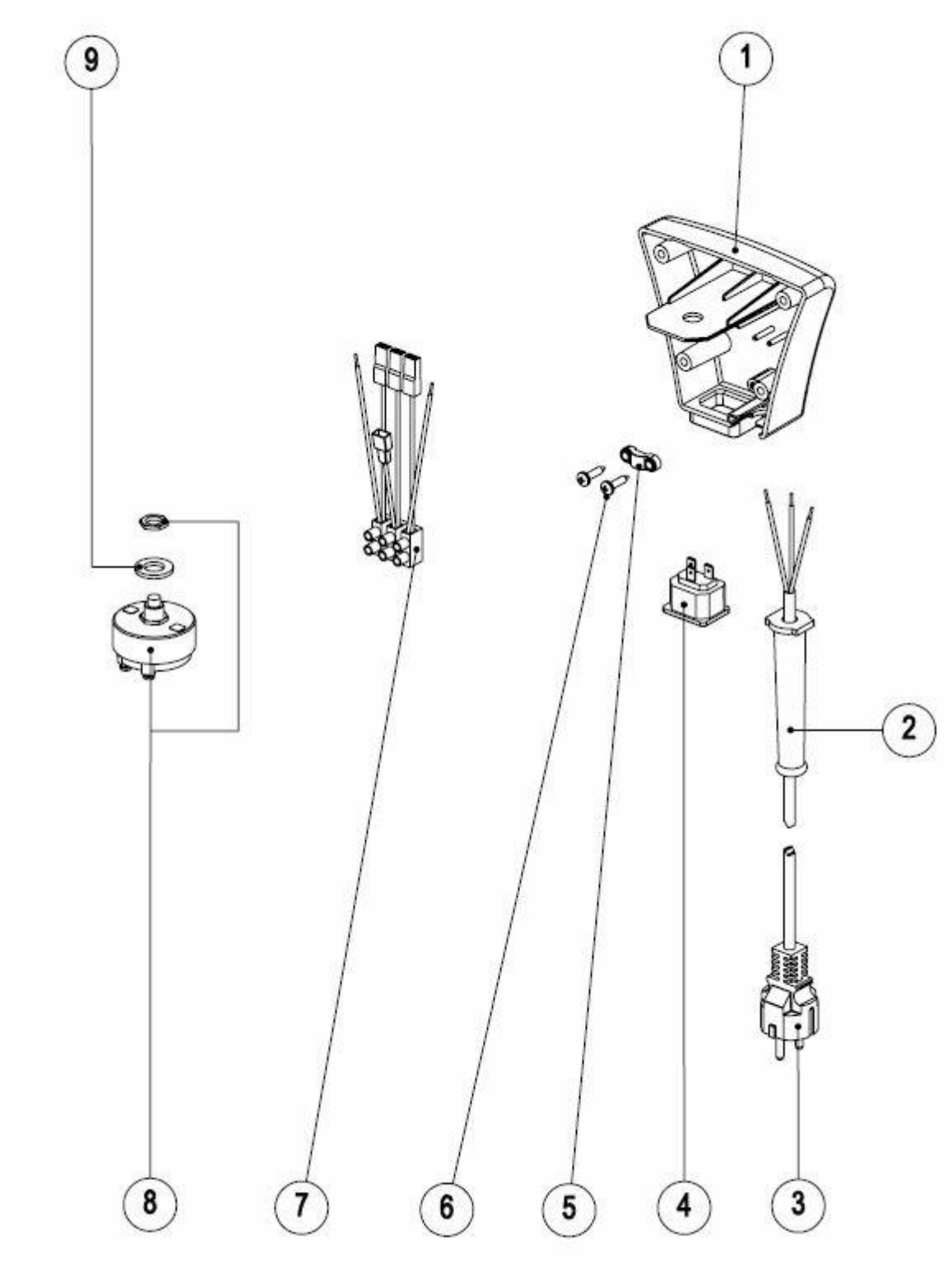

V. BRØNDUM A/S	Splittegning Exploded View Explosionszeichnung	**Ghibli SB 143 L10**

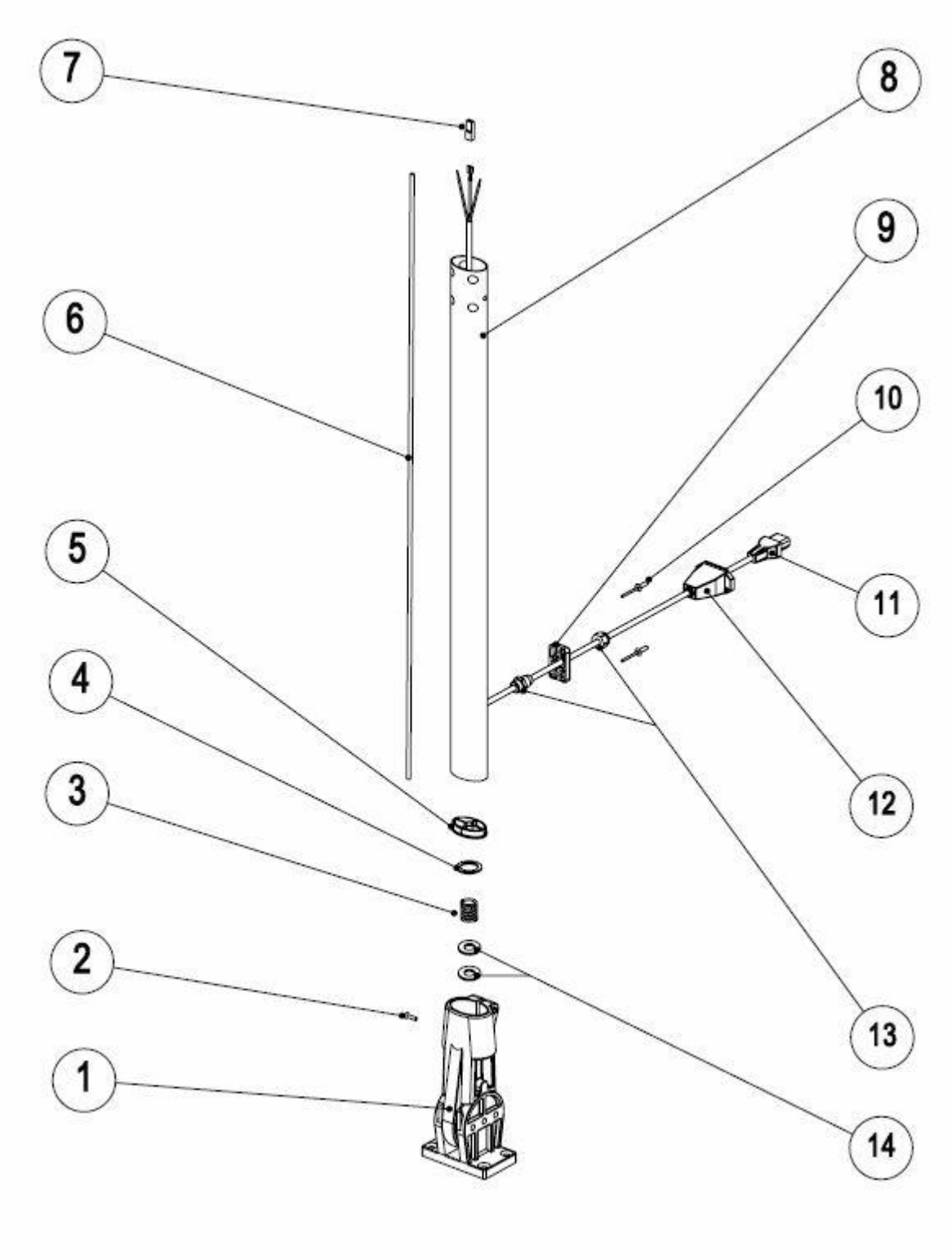

V. BRØNDUM A/S	Splittegning Exploded View Explosionszeichnung	**Ghibli SB 143 L10**

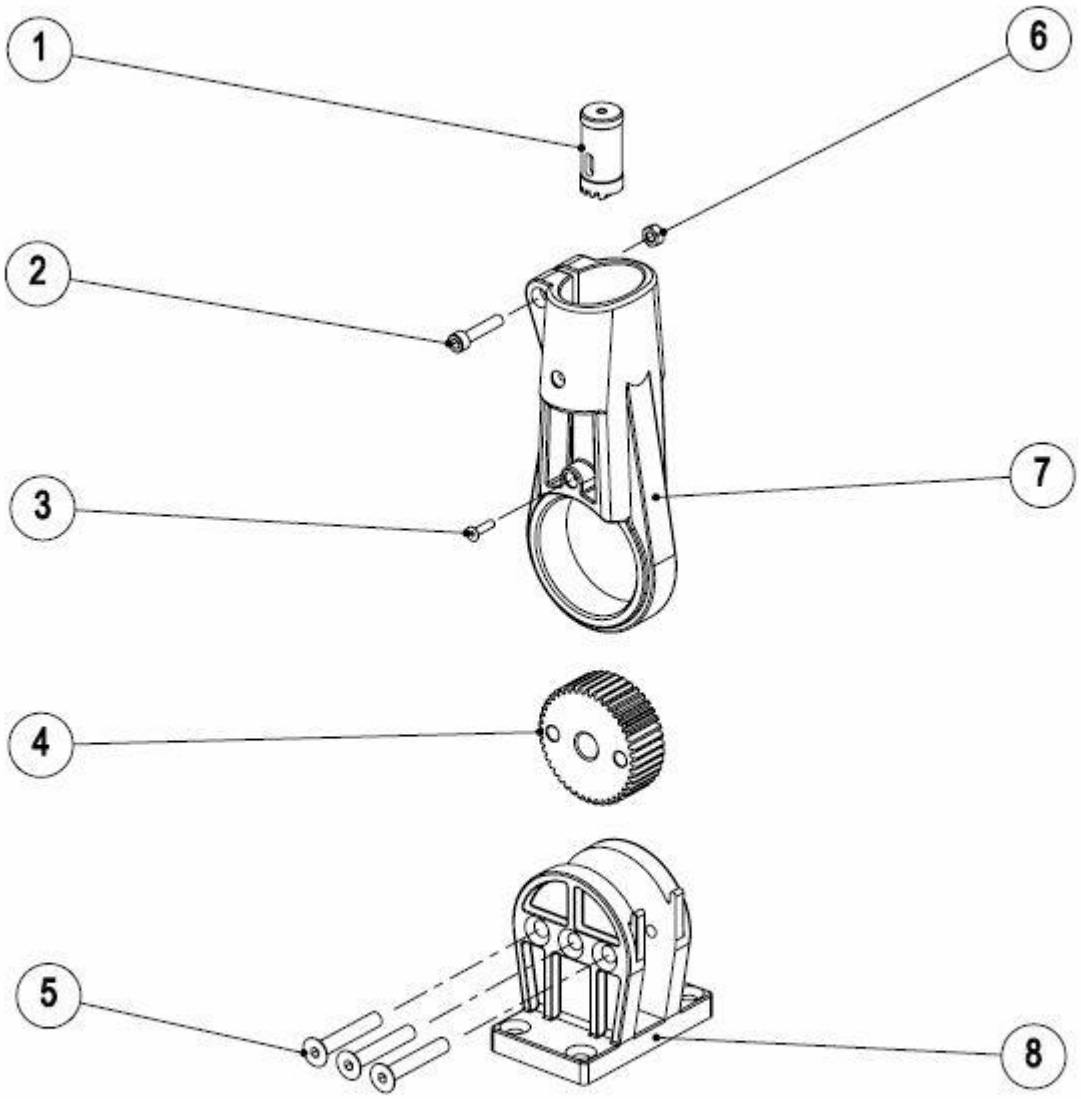

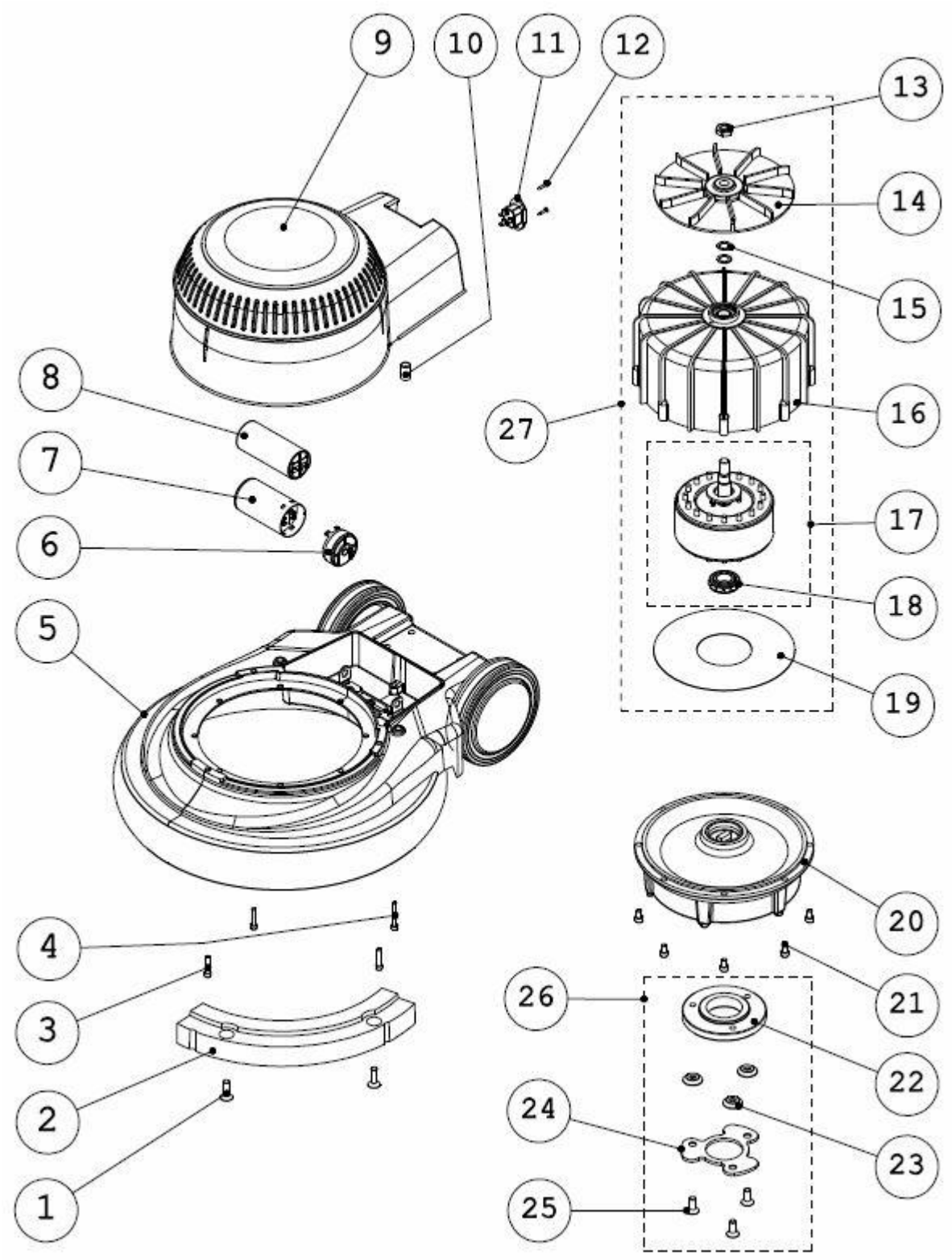
9
10
11
12
13
14
15
16
17
18
19
20
21
22
23
24
25
26
27
8
7
6
5
4
3
2
1

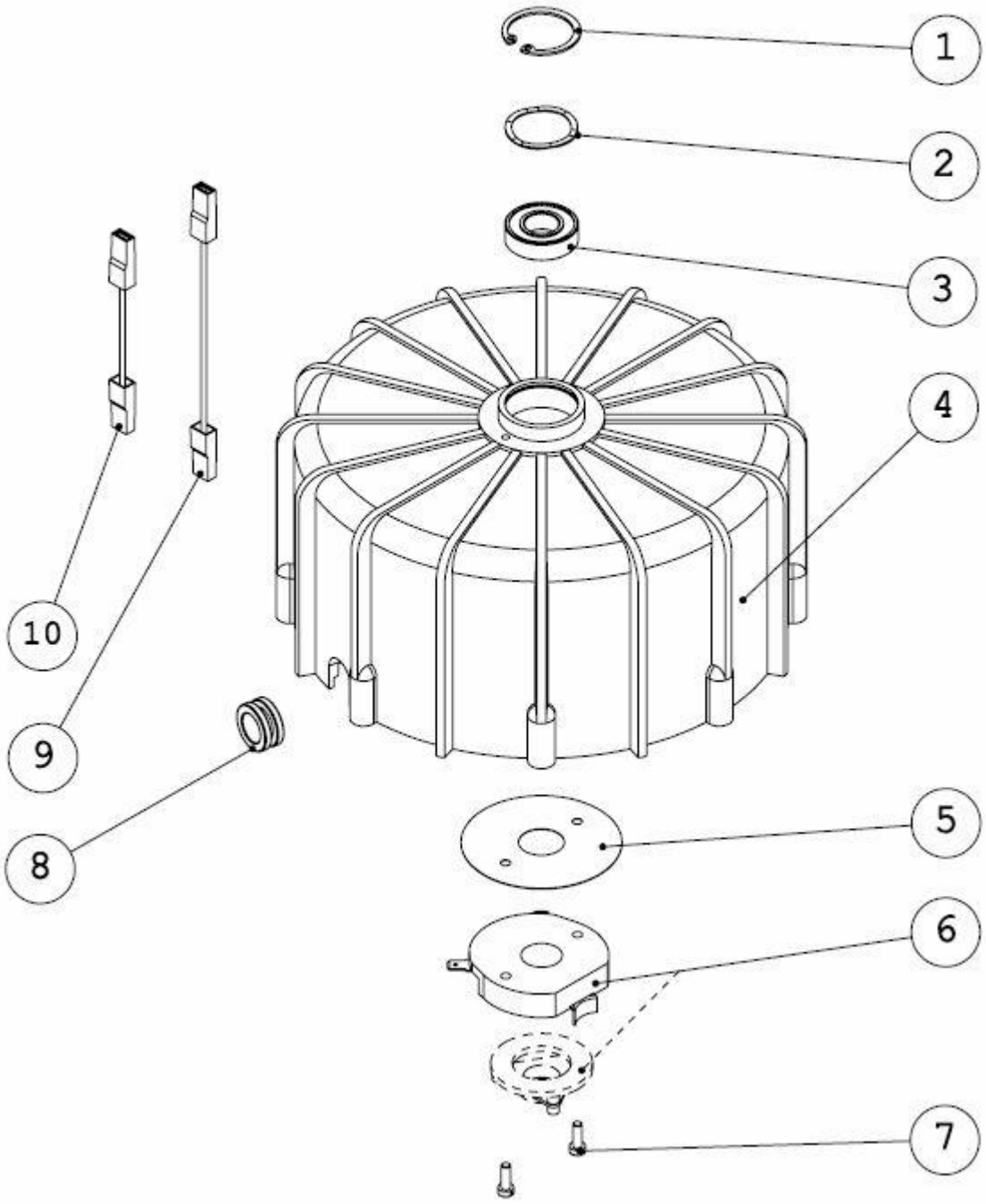
1
2
3
4
5
6
7
8
9
10

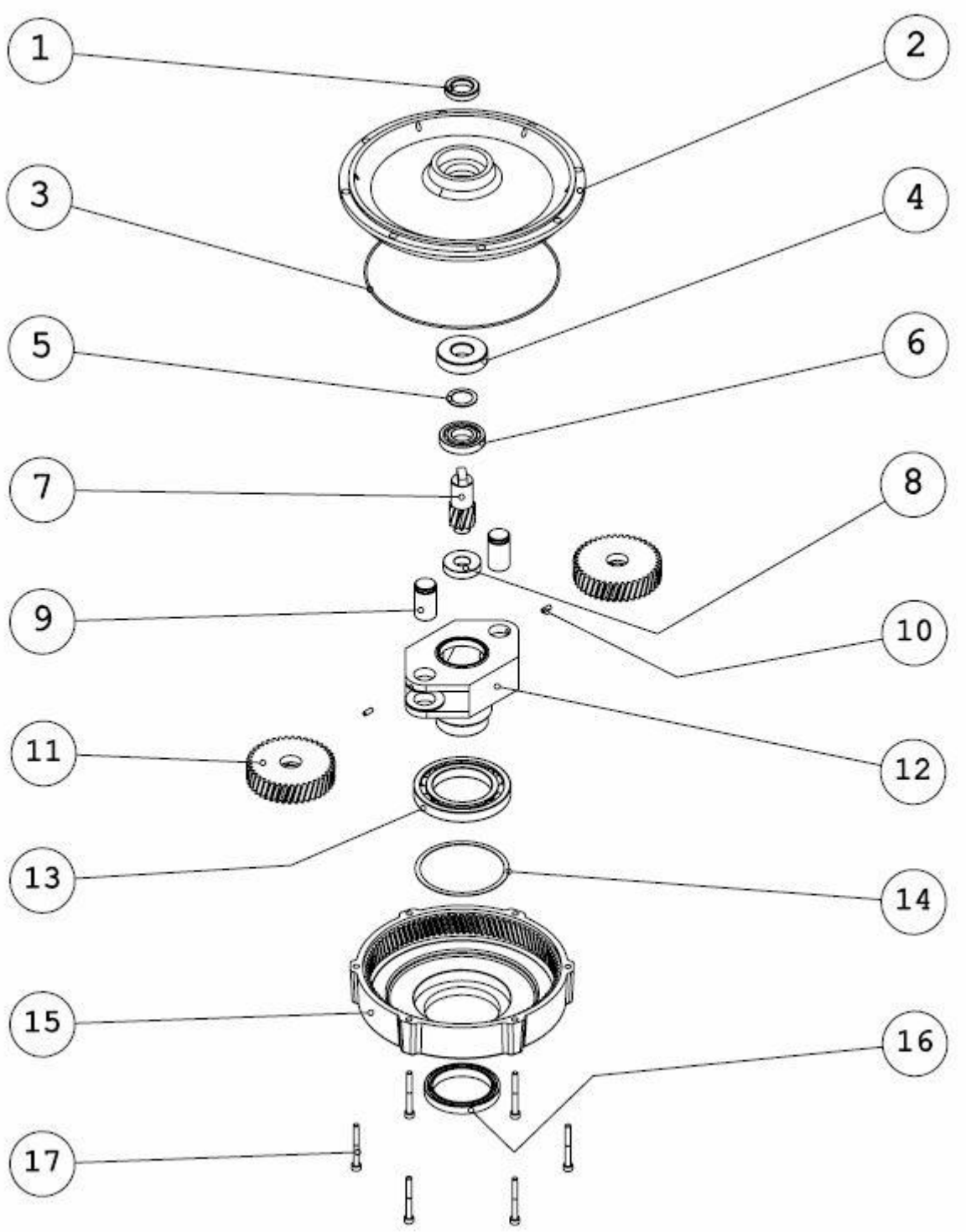
1
2
3
4
5
6
7
8
9
10
11
12
13
14
15
16
17

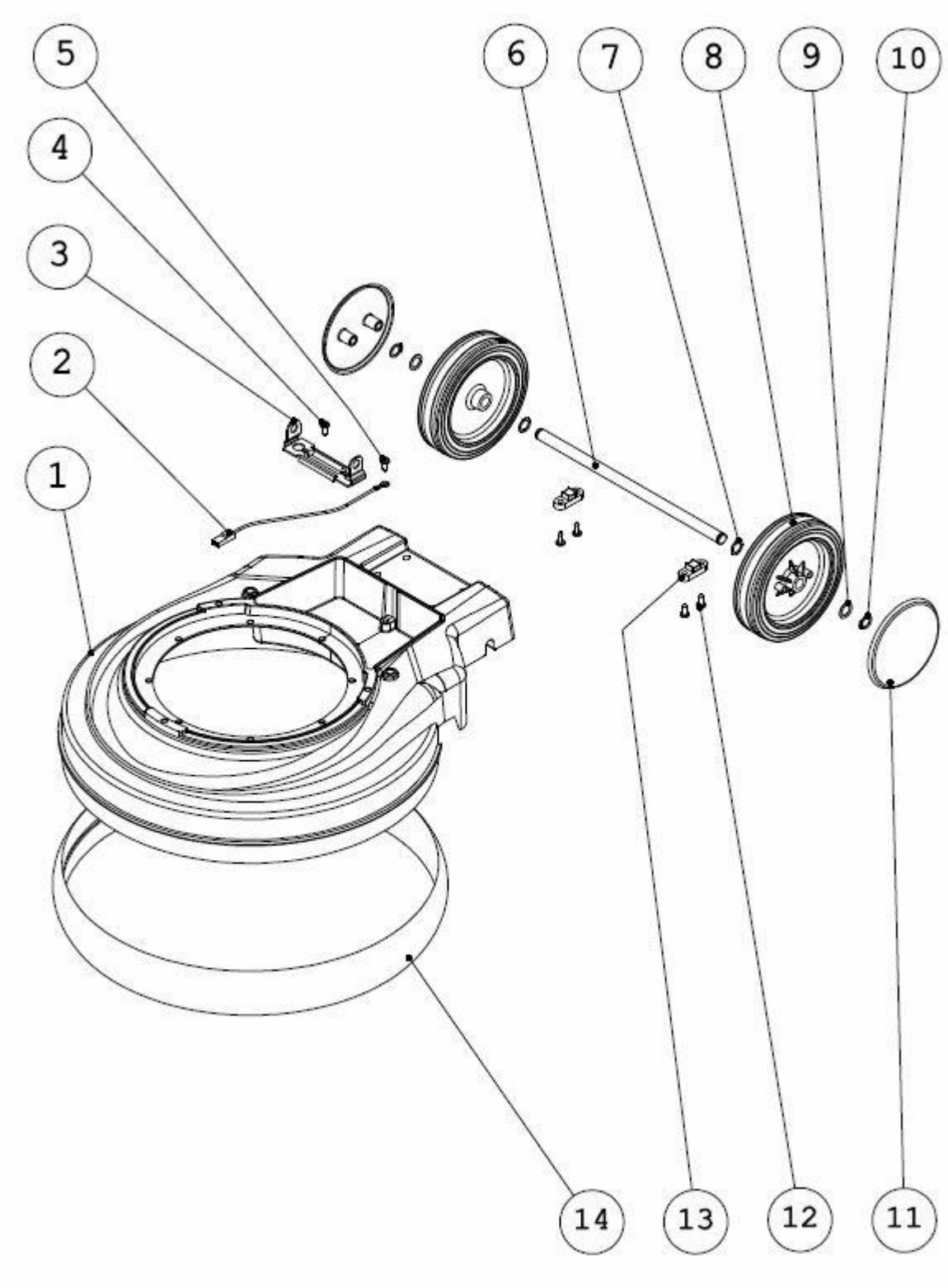
5
4
3
2
1
6
7
8
9
10
14
13
12
11